VETON

Charging masterpieces.

Bekabeling enkel laadpunt

Type B differentieelschakelaar

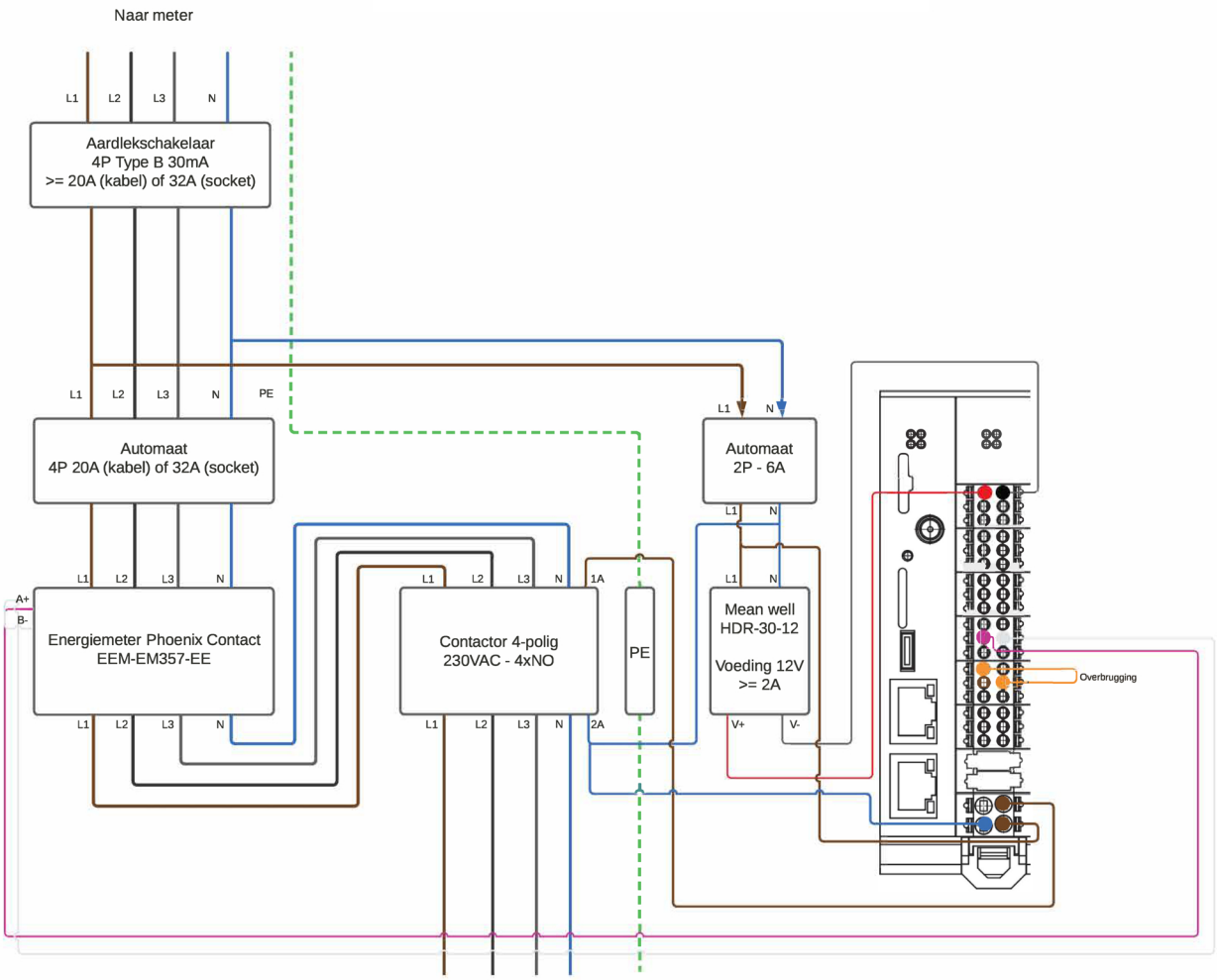

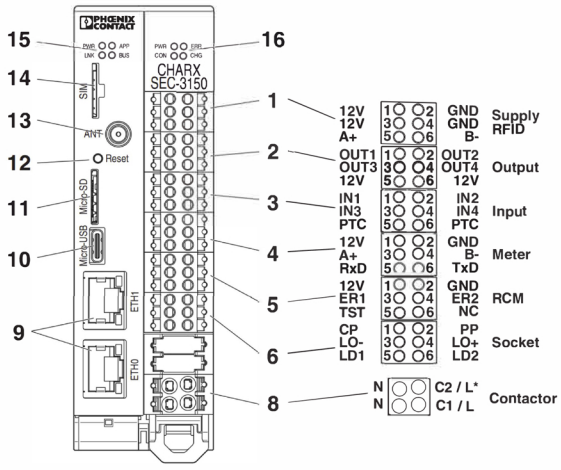

CHARX SEC-3xxx

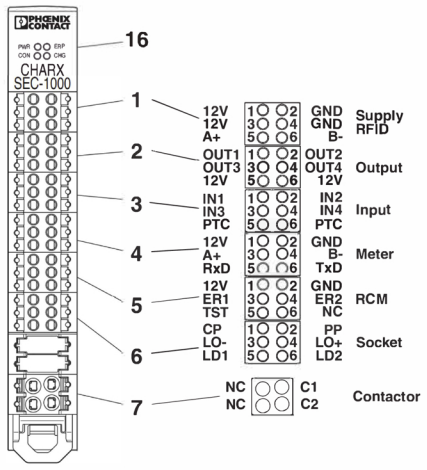

CHARX SEC-1000